Bulletin of Environment, Pharmacology and Life Sciences
Bull. Env. Pharmacol. Life Sci., Vol 2 (11) October 2013: 48-52

Online ISSN 2277-1808
Journal's URL:http://www.bepls.com

ORIGINAL ARTICLE

Form of Waste Water Discharge in Khamir Port Solar Distillation for Environmental Management by the empirical equation

Mehdi Nezhad Naderi[1], Masoud Reza Hessami Kermani[2], Gholam-Abbas Barani[3]
[1]- Department of Civil Engineering, Shahid Bahonar University, Kerman, Iran.
Email:Mehdi2930@yahoo.com.
[2]-Asisstant Professor, Department of Civil Engineering, Shahid Bahonar University, Kerman, Iran.
[3]-Professor, Department of Civil Engineering, Shahid Bahonar University, Kerman, Iran.

ABSTRACT
Using of solar distillation is a convenient way to obtain fresh water resources in areas there have available saline water resources. But desalination of sea water produces wastewater that is much higher salt concentrations from sea water. Waste must be disposed of in such a way that the least effect on the accept or water environment (sea, in most cases).Initial dilution and its characteristics play important roles in designing of effluent disposal into the sea. Using the mixing model is very common for estimation of initial dilution. In this study the application of T form diffuser has been addressed for waste disposal of Khamir Port solar desalination site by using empirical equations. Initial dilution is related to water depth, diameter, flow rate, the distance between theopening outlets and velocity of the sea water.As the results of this paper, the critical and the best initial dilution were determined with regard to different environmental conditions.
Keywords: *desalination unit, saltwater, Mixing zone, Initial dilution, T form Diffuser.*

Received 19/08/2013 Accepted 22/09/2013

INTRODUCTION

Providing clean water is one of the major problems in developing or not developed countries.Water levels in these countries depend on the amount of water in lakes and rivers.Water pollution and even industrial wastewater are fundamental problem for including the provision of safe water. Research shows that 94 percent of available water on Earth is salty.3% of fresh water is mostly in North and South poles in form of ice, There are only about 3% of water on earth is drinkable and healthy bark.There are many areas in which they need access to fresh water and healthier facility is not possible, Therefore need for investment in research and study of different methods of desalination of saltwater feels.At first glance the use of fresh water now seems very good but when the water supply is low.However, when the volume of water extracted is high,there are financial costs of implementation issues for the supply of land, building construction, supply and installation of facilities and structures (such as intakes, pipelines and water disposal system).Another aspect of this type of desalination is destructive environmental effects of around the disposal of wastewater. Some of these effects such as increasing of salinity could be dangerous for fish and other animals in the ocean environment and that can cause the loss of them or away from the area.Another risk is damage of the plant tissue by disruption of chemical properties, salinity and temperature of seawater.Another threat to human life or living in areas near the sea is increasing of ground water resources salinity due to sea water.With regard to the above destructive effects of desalination on the marine environment and coastal areas, the designing of desalination disposal system must be carefully. In this paper we describe the marine depletions and plume jet by mixing mechanism. Then the governing equations and the expression characteristics of Khamir desalination site are paid and initial dilution by diffusers is defined.

Governing equations

When sewage is discharged into the sea then immediately mixed to environment.
Initial mixing zone is done through diffusers in a radius about "100 meters and few minutes after discharging wastewater to the environment that is defined near field.The incorporation of this region is determined by intensity of mixing due to turbulence that generated by buoyancy force and momentum of the discharged jet.Processes that occur in this area include a mix of free plume, plume hitting to water surface, the horizontal distribution and additional mixing beyondof final height of plume.Near field when

ends that the turbulence due to discharge is less than the effect of turbulence due to buoyancy force.For a layer that is distributed below the surface, the loss of momentum is due to stable distribution of the density profile inside the layer.Beyond the Near field, the plume of contamination moves with the acceptor environment flow and that is distributed by turbulence of this area that is defined Far field. Mixing in a Far field is quieter than near field.Finally input waste water with initial concentration is mixed in near field andfar field then average pollutant concentrations will reduce to acceptable standards in coastal water.Although the concentrations of pollutants in near field may damage to marine ecosystems, But because of given the small size of the area to the sea in this area, the adverse effects of waste water discharging is not regarded.Discharging a fluid with the initial momentum from a hole or groove into a large volume of fluid is called jet.The initial velocity is caused movement of the jet and the amount of discharge from the jet is important for form ofjet movement. Discharge of water from a tube into a pool is a clear example for a jet.The plume stream is similar the jet with the difference that the initial velocity is notreason of plume flow movement but reason of fluid motion is difference in the density with the recipient environment. For example, air flow caused by the fire plume is a clear example.The plume was created without any initial velocity and as a result of the density difference due to the air warming. The discharge of pollutants into the sea usually caused by a combination of jet and plume and that is rarely due to only jet or simple plume. Primarily discharge of pollutants into the sea act as jetdue to the initial velocity and momentum flux and thenthat act the same as plume because of energy dissipation of velocity operation due to taking the distance into sea.As the motion of the tube, the behavior of pollutants can also take a layer or turbulent condition that in this state turbulence criterion is Reynolds numbers above 4000.The pollutants in the tube have density more than the sea water, and it may those sat there on the bed.Discharge of pollutants must be same as jet mode at the beginning to move to the water environment.Discharge of pollutants caused dilution by creating more turbulence with the water environment.It is mentioned standards proposed by the U.S. Environmental Agency that discharge of pollutants process must be located in maximum radius of 200 meters from beginning of the tube[4].

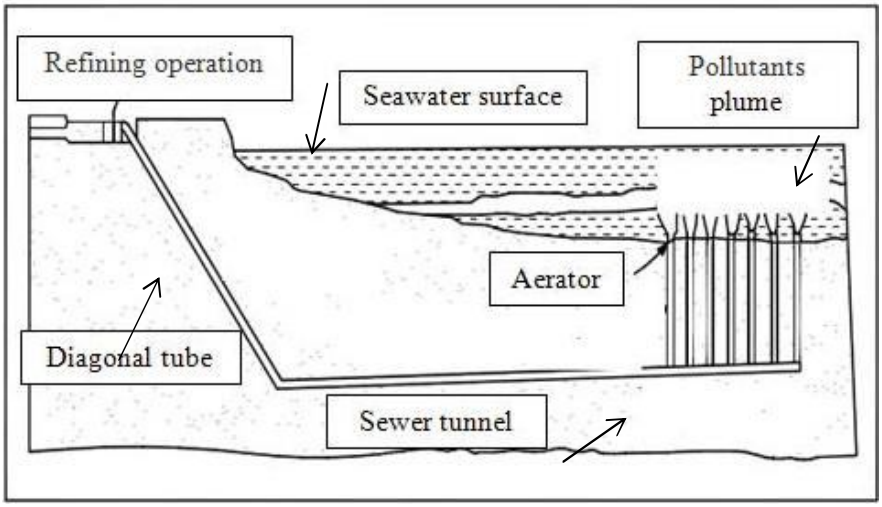

Figure 1 - A typical sewer tunnel to discharge sewage into the sea [3].

Sewage outflow from single- diffuser or multiport diffuser can be removed. Multiport diffuser in the thermal discharge showsgreater rates than single-diffuser in initial dilution.AMultiport diffuser has linear structure form that includes a few branches with large ducts with spaced from each that goes out heat sewers from these ducts.In this paper sewage outflow from a T-shaped diffuserin multiport diffusers is parallel to the stream environment.[1] gained initial dilution equation in T-shaped diffuser byusing the Bernoulli equation and the momentum equation for the pressure continuity along the axis of multiport diffuser.In T shaped diffuser, the momentum loss is considered due to the surrounding environment flow in the momentum equation between the front and rear sections of the T-shaped diffuser. Then by combining the energy equation and the momentum equations, the amount of dilution in the near-depletion of T-shaped diffuser be calculated as follows:

$$\frac{S_t}{S_o} = 1 - C_d M_r \qquad (1)$$

The$S_t$isT-shaped diffuser minimum dilution level and $C_d$is effective coefficient of the inertia of the flow and $M_r$is proportion between momentum of depletion discharge by T-shaped diffuser and the momentum of discharge by surrounding environment flow that is calculated as follows:

$$M_r = \frac{(U_a)^2 H}{(U_O)^2 D} \quad (2)$$

In this formula H is depletion depth and D is the diameter of the discharge tube, U_O is the depletion discharge rate and $U_a$is surrounding environment flow rate. S_oIs initial dilution of the surrounding flow in inertia state that follows by [1]:

$$S_0 = \sqrt{\frac{H\cos\theta_0}{2B}} \quad (3)$$

θ_0Is Angle between the urethra and the sea floor, usually less than 45 degrees is chosen.
[5] obtained constant coefficients of Equation with experimental data in the following way:

$$\frac{S_t}{S_o} = \frac{1}{1-[60\exp(-5{M_r}^{0.2})]M_r} \quad (4)$$

By substituting equation (3) in equation (4) we get:

$$S_t = [1 - [60\exp(-5{M_r}^{0.2})]M_r]\sqrt{\frac{H\cos\theta_0}{2B}} \quad (5)$$

It is first necessary to define B parameter for T-shaped diffuser. This parameter, which is denoted by the letter B is the area of each hole of T-shaped diffuserto the distance between holes in the T-shaped diffuser:

$$B = \frac{A_0}{l} \quad (6)$$

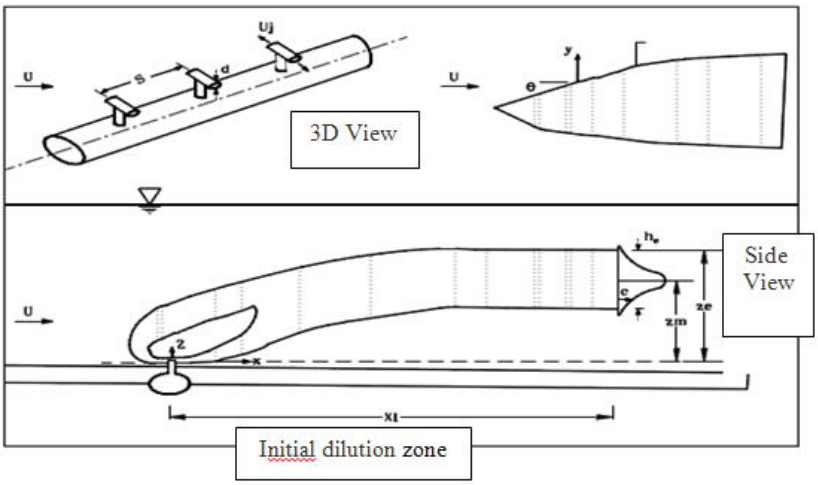

Figure 2 - exit of effluent plume from diffuser into the sea with marine parameters [3].

Khamir Port Solar Distillation and surrounding area

RO technology is used in Khamir port solar distillation in Hormozgan province with the 40,000 cubic meters of fresh water per day capacity to supply for drinking.For reasons mentioned in the introduction, one of the most important sections of the solar distillation site is effluent disposal system. Importance of this issue is the environmental impact and economic costs.According to information received from the desalination system and the efficiency of the system the effluent characteristics are considered in table 1.

RESULTS

Calculation of the minimum dilution level of: the T-shaped diffuser

With regard to the duct diameter is 40 cm and the distance between holes is considered to be evacuated 12 m and B values according to formula (6) is 0.010467.Then the values of H (in Table 3) and the velocity of water in the fourth column of Table 4and (M_r) is calculated. Also$\theta_0$is considered 45 degrees. FinallyS_t obtains for the outlined scenarios.

Table 1. Characteristics of effluent of Khamir Port Solar Distillation[2].

effluent discharge	0.463 m3/s
Effluent density	90000 mg/lit
Effluent temperature	25°C

Table2. Characteristics of effluent of surrounding areas of Khamir Port SolarDistillation[2]

Velocity of flow	0.5 to 3 m/s
Wind velocity	0 to 2 m/s
environment temperature	25°C
coefficient of Darcy Veysbakh in near the sea	0.018
coefficient of Darcy Veysbakh in depletion area	0.2
near the sea Slope in	2.5%
Slope in near depletion area	0.6%
Environment density	30000 mg/lit

Table 3. Characteristics of effluent of surrounding areas of Khamir Port SolarDistillation[2].

Diameter of diffusers	40cm
Number of diffusers	3
Distance between diffusers	12m
Distance of first diffuser from sea	826m
Distance of second diffuser from sea	838m
Distance of third diffuser from sea	850m
Height of diffusers from bottom of sea	1.2m

Table 4. Scenarios of Form of Waste Water Discharge in Khamir Port Solar Distillation

	depletion area (m)	Velocity of wind (m/s)	Velocity of water (m/s)	depletion depth (m)
The first scenario	1000	0	1	9.8
The second scenario	1000	0	2	9.8
The third scenario	1000	0	3	9.8
The fourth scenario	500	0	0.5	6.8
Scenario V	500	0	1	6.8
Scenario VI	700	0	0.7	8
Scenario Seven	700	0	1	8
Eight scenario	850	0	0.5	8.8

Table 5. Result of Scenarios of Form of Waste Water Discharge in Khamir Port Solar Distillation

	S_o	M_r	S_t
The first scenario	18.19405	16.1964	15.3265
The second scenario	18.19405	64.7865	17.4883
The third scenario	18.19405	145.7703	17.985
The fourth scenario	15.155	2.8152	9.693
Scenario V	15.155	11.232	12.088
Scenario VI	16.4384	9.25524	12.7084
Scenario Seven	16.4384	13.221	13.4458
Eight scenarios	24.382	1.469	16.164

CONCLUSION

The use of saline water resources by solar distillation is available in many areas that are an affordable way to provide drinkable water. But the site desalination plant produces a much higher salt concentration of sea water. Using of the mixing models is very common for estimating of initial dilution. In this study, the performance of the T-shaped diffuser has been studied for waste disposal of Khamir port solar desalination siteby using empirical equations.

Initial dilution is related to water depth, diameter, flow rate, distance between openings, water velocity environment. After considering different environmental conditions and the most critical conditions the best initial dilution is determined. In the above scenarios the third scenario is best and the fourth scenario is worst case.

REFERENCES

1. Adams, E.E. (1982). Dilution analysis for unidirectional diffusers, Journal of theHydraulic Division, ASCE, 108, 327-342.
2. MoshirPanahee, d., Ghaheri, M., and Ranaee, f. (2010).Waste disposal site location and desalination Port paste", fourth Environmental Engineering Conference, Tehran, Tehran University, Iran.
3. Takdastan, or. And Hajizadeh, n. And Jafarzadeh, N., (2006). Discharge of sewage into the sea is a good option for the disposal of sewage in coastal areas, Seventh International Conference on Coasts, Ports and Marine Structures, Ports and Shipping Organization, Tehran, Iran.
4. US Environmental protection agency- USEPA.(1994). Dilution models for effluent discharge. Office of research and development Washington DC EPA/600/R-94/086.
5. Won Seo, I.I., Kim, H.S. , Yu, D. and Kim, D.S., (2001). Performance of Tee diffusers in shallow water with cross flow. J. of HydrEng, 34, 53-61.

How to cite this article

Mehdi Nezhad Naderi, Masoud Reza Hessami Kermani, Gholam-Abbas Barani. Form of Waste Water Discharge in Khamir Port Solar Distillation for Environmental Management by the empirical equation. Bull. Env. Pharmacol. Life Sci., Vol 2 (11) October 2013: 48-52